RKT-855 TRIMMER POTENTIOMETER-8mm CERAMIC

- 8mm Round/ Single-Turn/ Cermet Industrial/ Open Frame
- Cross slot adjustment options
- Horiontal and vertical mounting styles
- Dust resistant/ splash resistant covers
- PC board stand-offs and retention feature
- Front and top adjust styles

Electrical Characteristics	
Standard Resistance Range	100Ω to 1meg ohm (see standard resistance table)
Resistance Tolerance	±20% (TK±25%)
Adjustment Angle	280℃ ± 15℃
Residual Resistance	≤500Ω, 10Ω>500Ω, 2% (TK≤1KΩ, 2KΩ>1KΩ, 5%)

Environmental Characteristics	
Power Rating Max Working Voltage	250V (TK0.1Watt)
70℃	0.3Watt (TK0.2Watt)
Temperature Range	-30℃ to +100℃ (TK -25℃ to +100℃)
Temperature Coefficient	±250ppm/℃ (TK±1000 ppm/℃)
Rotational Life	±10% (TK±15%)
Load Life	1000 hours 0.3Watt 70℃±5% (TK 500 hours 0.2Watt 70℃ ≤100KΩ, +7%>100KΩ, ±10%)

Physical Characteristics	
Torque (Operating)	50~350gf. Cm
Stop Strength	0.8kgf. cm
Soldering Conditions	240℃ to 260℃ And within 3 seconds
Marking	Resistance Code
Standard Packing	500 PCS Per bag
Aqueous cleaning not recommended	

How to Order

RKT-855M --F -- 101 – R

- Model
- Style
- Resistance Code
- RoHS

Resistance Table

Resistance(Ohms)	Resistance Code
100	101
200	201
300	301
500	501
1,000	102
10,000	103
100,000	104
1,000,000	105

Cover Style		L	D
Q	N1	4.2	8.8
	N2	6.7	5.0
	N4	12.7	5.0
G	K2	5.7	6.0
	K3	9.7	6.0
	K5	15	6.0

Common Dimensions

RKT-855M-F

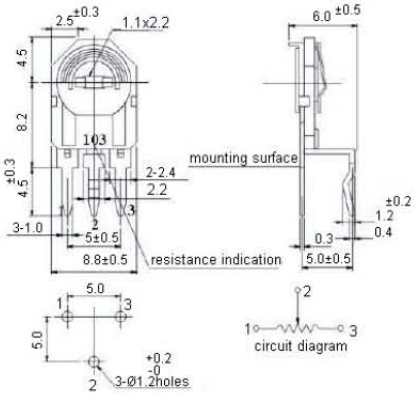

MOUNTING DETAIL TOLERANCE±0.1

RKT-855M-R

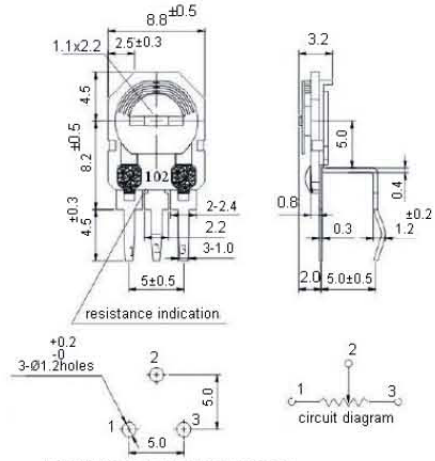

MOUNTING DETAIL TOLERANCE±0.1

RKT-855S-F

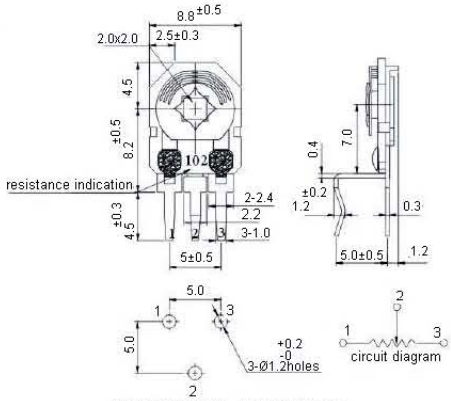

MOUNTING DETAIL TOLERANCE±0.1

RKT-855S-R

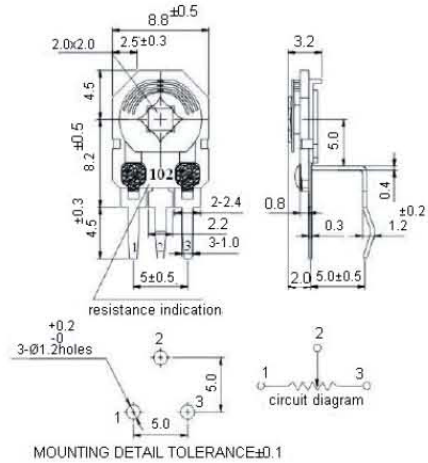

MOUNTING DETAIL TOLERANCE±0.1